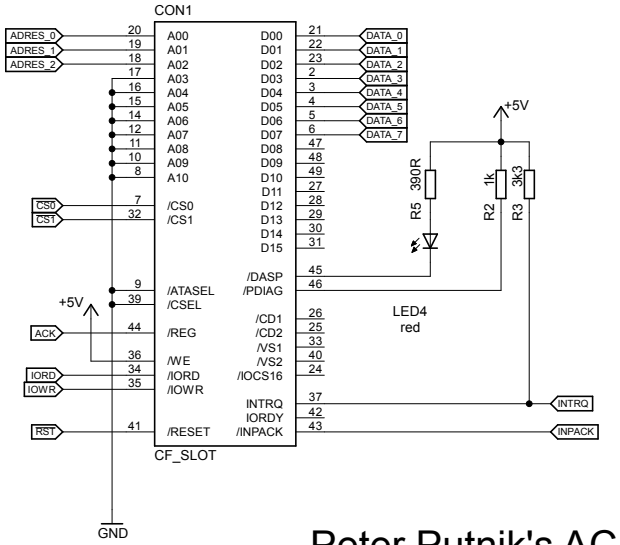

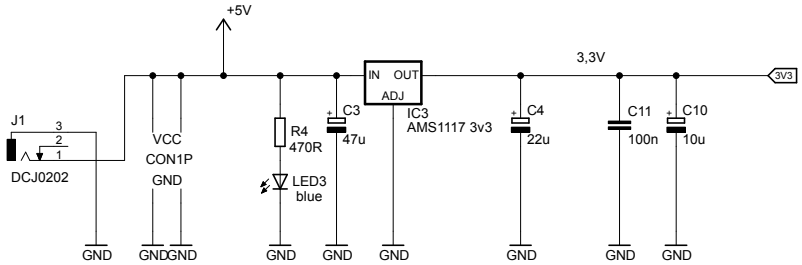
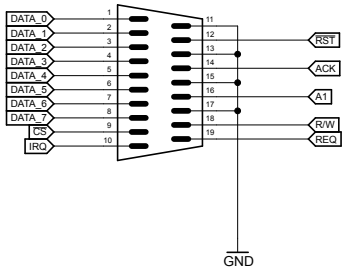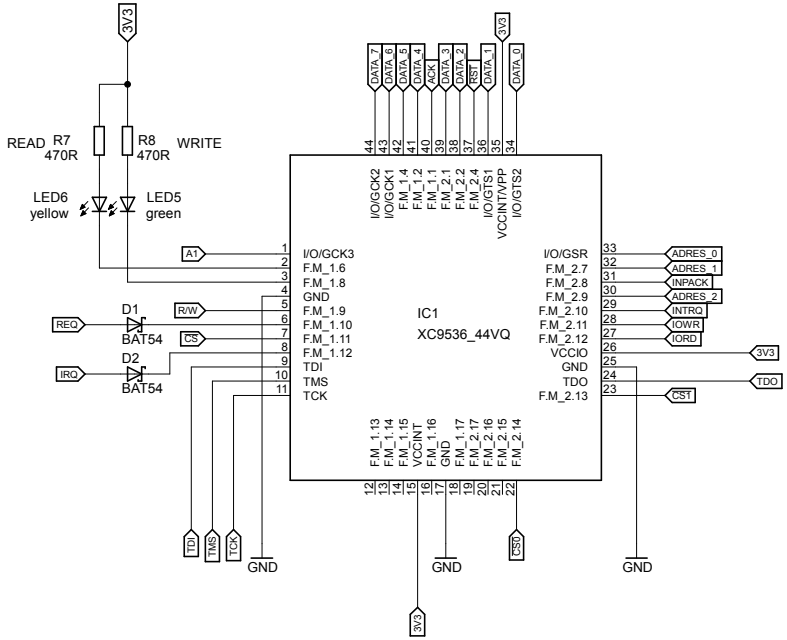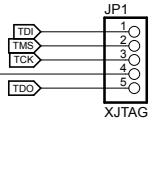
Peter Putnik's ACSI-CF Interface remake by tOri